TECHNICAL DATA SHEET

Casa Milano

Casa Milano

Euphoria Two Way Concealed Shower Set Matt Gold

390100111279

The Luxurious Euphoria Collection is a high-end shower system that is sure to add a touch of luxury to your bathroom. It features a concealed body, meaning that all of the plumbing is hidden behind the wall. This gives the shower system a clean and streamlined look. It is made of high-quality materials and is sure to last for years to come. It is also easy to install and maintain.

SPECIFICATIONS

Color	: Available in Chrome, Matt Gold, Matt Black, Rose Gold, Gun Grey
Mounting	: Concealed
Operation Pressure (bar)	: 4.5
Operation Type	: Manual
Flow Rate (liter)	: 10
Tap Holes	: 2 Holes
Material	: HBP59 Brass + ABS Head Shower + ABS Hand Shower
Height (mm)	: 1340
Depth (mm)	: 355
Shape	: Round
Water Efficiency Rate	: ★★★★★

FLOW CHART

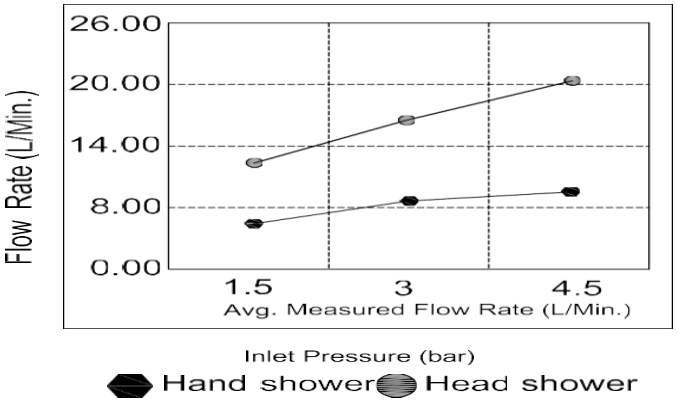

DRAWING

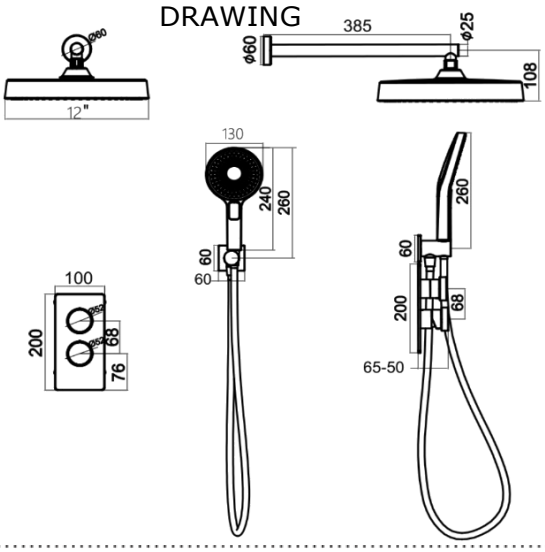

TECHNOLOGY

Leak Proof

Durable Materials

ECO Smart

Follow us - casamilanouae

www.casamilanoitaly.com

Email us - info@casamilanoitaly.com

WHATSAPP & TOLL FREE

800 9394